Dart Aerospace Ltd.

Date: Monday, 22/10/2007 2:17:22 PM
User: Linda Lacelle

Split 2 on 12.12

Process Sheet

Customer	: CU-DAR001 Dart Helicopters Services	**Drawing Name**	: ARM
Job Number	: 35298 - 2		
Estimate Number	: 12884		
P.O. Number	:	**Part Number**	: D3560044
This Issue	: 22/10/2007 **S.O. No.** :	**Drawing Number**	: D3560 ~~UNDER REVIEW~~
Prsht Rev.	: NC	**Project Number**	: N/A
First Issue	: / / **Type** : SMALL /MED FAB	**Drawing Revision**	: C
Previous Run	: 35032	**Material**	:
Written By	:	**Due Date**	: 29/10/2007 **Qty:** ~~14~~ 13 **Um:** Each
Checked & Approved By	:		
Comment	: Est Rev:A New Issue 07.05.24 EC Est Rev B ECN 987 07.10.09 EC verified by DD		

Additional Product

Job Number:

Seq. #:	Machine Or Operation:	Description :
1.0	M6061T6B0500X05000	6061-T6 Bar .50" x 5.0"
	Comment: Qty.: 1.3598 f(s)/Unit Total : 19.0365 f(s) 6061-T6 Bar 0.50" x 5.00" Batch: 7106152	07/11/30 (14)
2.0	BAND SAW	BAND SAW
	Comment: BAND SAW Cut blanks 15.500" long	07/11/30 (14)
3.0	HAAS1	HAAS CNC VERTICAL MACHINING #1
	Comment: HAAS CNC VERTICAL MACHINING #1 1- Mill as per Folio FA696 Rev: AA & Dwg D3560 Rev: C 2-C'sink 0.196" hole on manual mill as per dwg D3560 3-Deburr per dwg D3560	07/12/08 B.F 07/12/07
4.0	QC2	INSPECT PARTS AS THEY COME OFF MACHINE
	Comment: INSPECT PARTS AS THEY COME OFF MACHINE	07/12/08 S.F 07/12/07
5.0	QC8	SECOND CHECK
	Comment: SECOND CHECK	07.12.07 (14)

Form: rprocess

Date: Monday, 22/10/2007 2:17:22 PM
User: Linda Lacelle

Process Sheet

Customer: CU-DAR001 Dart Helicopters Services **Drawing Name:** ARM

Job Number: 35298 **Part Number:** D3560044

Job Number:

Seq. #:	Machine Or Operation:	Description :
6.0	D35921	PLATE

Comment: Qty.: 1.0000 Each(s)/Unit Total : 14.0000 Each(s)
PLATE 3 35331 08.01.29 1

7.0	LARGE FAB 1	LARGE FABRICATION RESOURCE 1

Comment: LARGE FABRICATION RESOURCE 1

1-Weld assembly as per dwg D3560

STEP:
1- clean material (buff bracket and bottom of arm with blue pad) lh
2- set up bracket and arm on jig lh
3- preheat bracket and arm with torch lh
4- clean before welding with brush lh
5- set up machine to 135 amps lh
6- weld across bottom and top ends lh
7- reheat with torch (60°) lh
8- on one side weld from bottom to top half way lh
9- same for other side (half way) lh
10- from half way point weld the rest of the first side (ease off pedal near end) lh
11- same for remaining side (ease off pedal near end) lh

08.01.29 1

8.0	QC5	INSPECT WORK TO CURRENT STEP

Comment: INSPECT WORK TO CURRENT STEP
08/01/29 (KC)

9.0	QC9	VISUAL WELDING INSPECTION

Comment: VISUAL WELDING INSPECTION
PD 08-01-29 (1)

10.0	HAND FINISHING1	HAND FINISHING RESOURCE #1

Comment: HAND FINISHING RESOURCE #1
Chemical Conversion Coat as per QSI 005 4.1
08.01.29 1

Form: rprocess

Date: Monday, 22/10/2007 2:17:22 PM
User: Linda Lacelle

Process Sheet

Customer: CU-DAR001 Dart Helicopters Services **Drawing Name:** ARM

Job Number: 35298 **Part Number:** D3560044

Job Number:

Seq. #:	Machine Or Operation:	Description :
11.0	QC3	INSPECT POWDER COAT/CHEMICAL CONVERSION
	Comment: INSPECT POWDER COAT/CHEMICAL CONVERSION	08/01/22
12.0	D2808	Spacer
	Comment: Qty.: 1.0000 Each(s)/Unit Total : 14.0000 Each(s) Spacer batch: B35330	mF 08-01-29
13.0	SMALL FAB 1	SMALL & MEDIUM FAB RESOURCE 1
	Comment: SMALL & MEDIUM FAB RESOURCE 1 1-Press bushing in D3560 arm per dwg D3562	mF 08-01-29
14.0	QC5	INSPECT WORK TO CURRENT STEP
	Comment: INSPECT WORK TO CURRENT STEP	08/01/29
15.0	PACKAGING 1	PACKAGING RESOURCE #1
	Comment: PACKAGING RESOURCE #1 Identify and Stock Location: inH	08.01.29
16.0	QC21	FINAL INSPECTION/W/O RELEASE
	Comment: FINAL INSPECTION/W/O RELEASE	08/01/29

Job Completion 2008/1/29

Form: rprocess

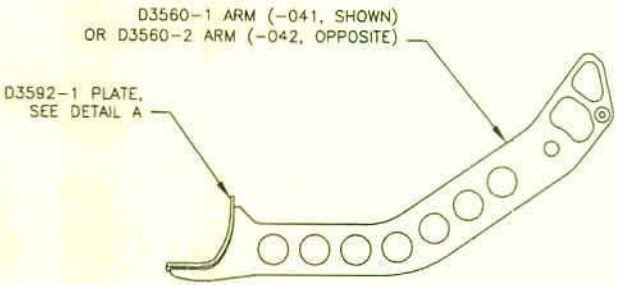

D3560-041 ARM WELDMENT (SHOWN),
D3560-042 ARM WELDMENT (OPPOSITE)

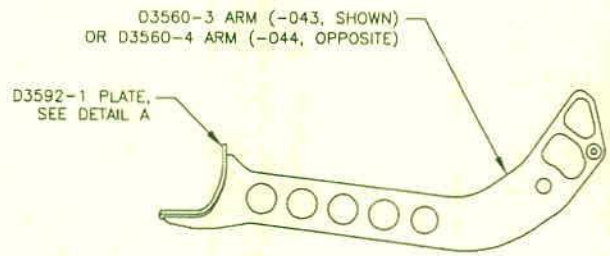

D3560-043 ARM WELDMENT (SHOWN),
D3560-044 ARM WELDMENT (OPPOSITE)

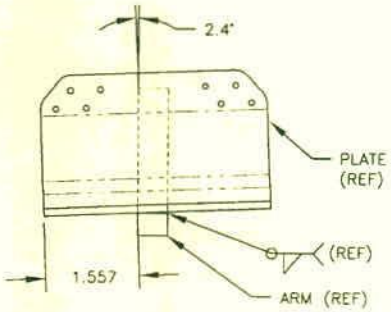

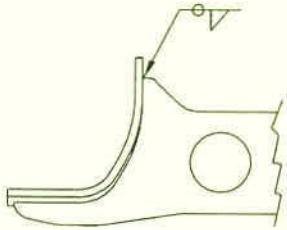

DETAIL A
(SCALE 1:1)

GENERAL NOTES

1) WELD PER QSI 004
2) FINISH: CHEMICAL CONVERSION COAT PER DART QSI 005 4.1
3) TOLERANCES ARE PER DART QSI 018 UNLESS OTHERWISE NOTED
4) ALL DIMENSIONS ARE IN INCHES

RELEASED
07.06.22

UNDER REVIEW
07.10.22 DC

C	07.06.19	REMOVE POWDER COAT
B	07.01.15	REDESIGN AS WELDMENT, ADD POCKETS
A	06.09.25	NEW ISSUE

DESIGN: GP	DRAWN BY: GP	DART	DART AEROSPACE LTD. HARVESTBURY, ONTARIO, CANADA
CHECKED:	APPROVED:	DRAWING NO. D3560	REV. C SHEET 1 OF 3
DATE: 07.06.19		TITLE: ARM WELDMENT	SCALE 1:4

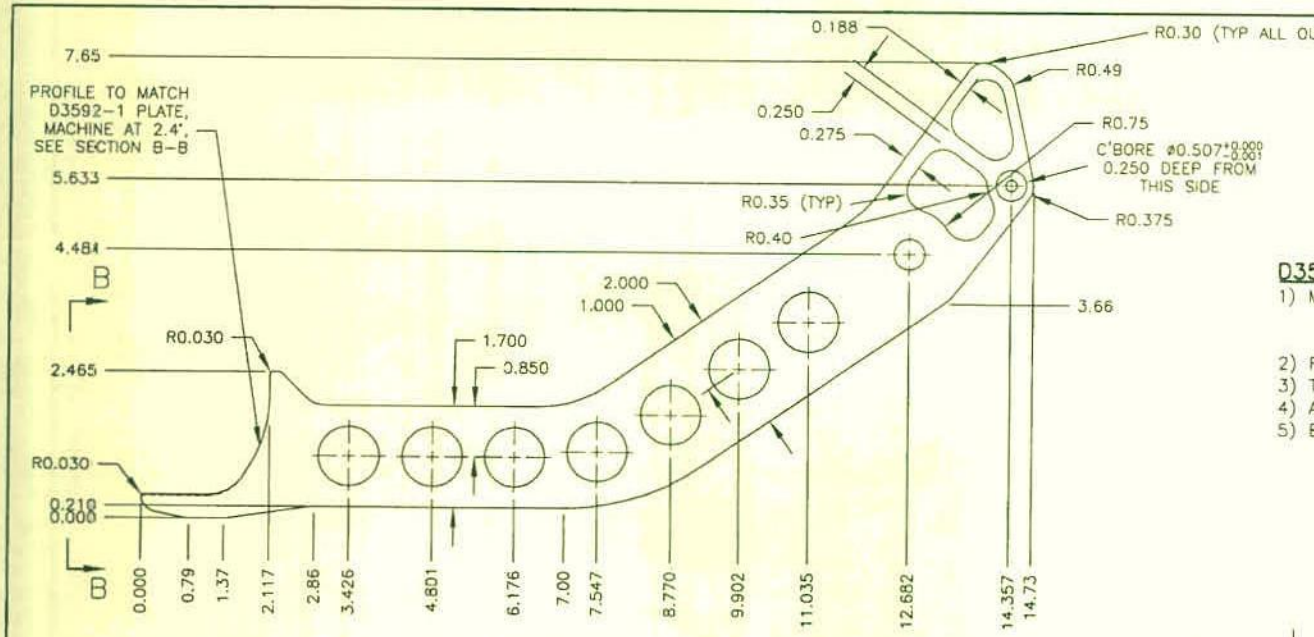

D3560-1 ARM (SHOWN), D3560-2 ARM (OPPOSITE)

1) MATERIAL: 6061-T6 ALUMINUM, 0.500 THICK (QQ-A-200/8 OR QQ-A-250/11, REF DART SPEC. M6061T680.500)
2) FINISH: NONE
3) TOLERANCES ARE PER DART QSI 018 UNLESS OTHERWISE NOTED
4) ALL DIMENSIONS ARE IN INCHES
5) BREAK ALL SHARP CORNERS 0.005 TO 0.015

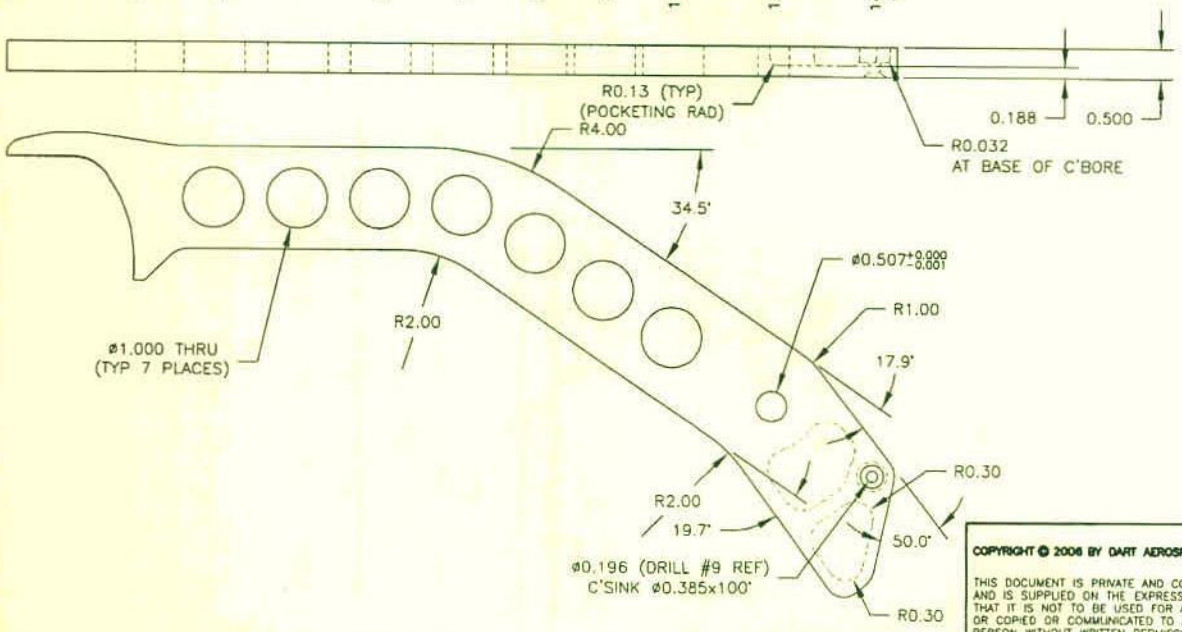

SECTION B-B

SCALE 1:1

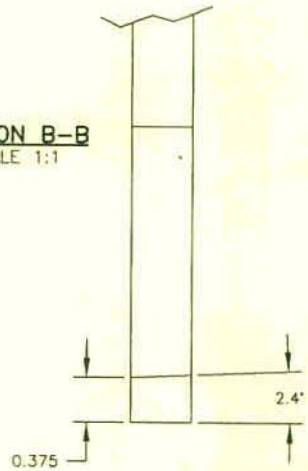

RELEASED 07.06.29

DESIGN GP	DRAWN BY GP	DART	DART AEROSPACE LTD. HAWKESBURY, ONTARIO, CANADA
CHECKED	APPROVED	DRAWING NO. D3560	REV. C SHEET 2 OF 3
DATE 07.06.19		TITLE ARM WELDMENT	SCALE 4:2

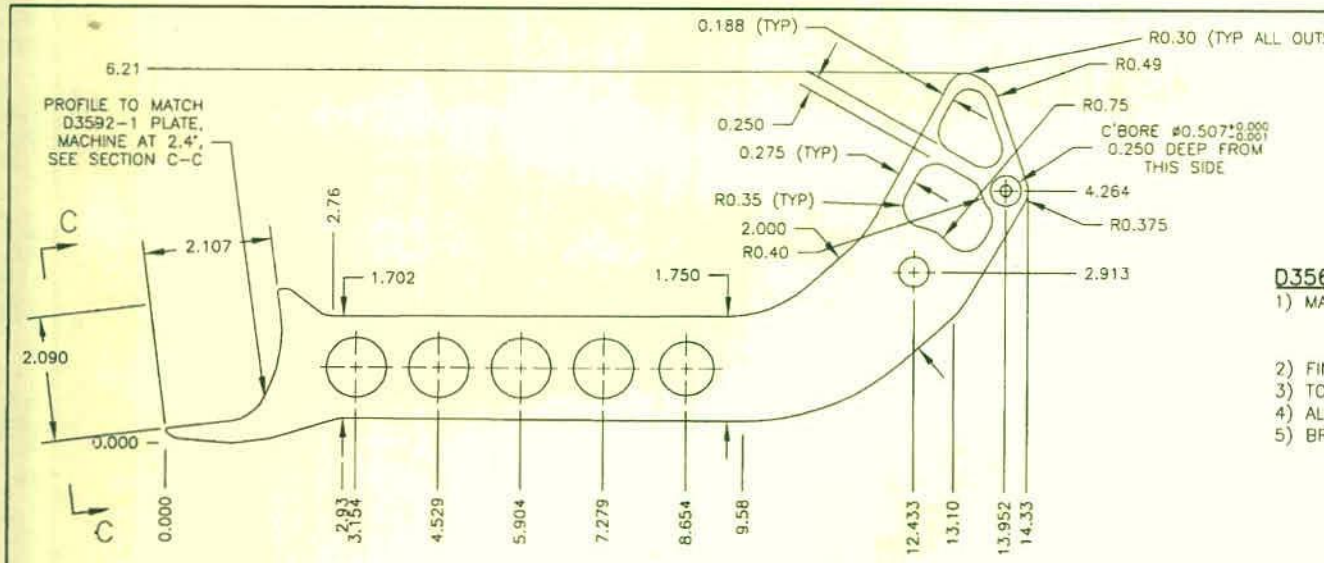

D3560-3 ARM (SHOWN), D3560-4 ARM (OPPOSITE)

1) MATERIAL: 6061-T6 ALUMINUM, 0.500 THICK (QQ-A-200/8 OR QQ-A-250/11, REF DART SPEC. M6061T6B0.500)
2) FINISH: NONE
3) TOLERANCES ARE PER DART QSI 018 UNLESS OTHERWISE NOTED
4) ALL DIMENSIONS ARE IN INCHES
5) BREAK ALL SHARP CORNERS 0.005 TO 0.015

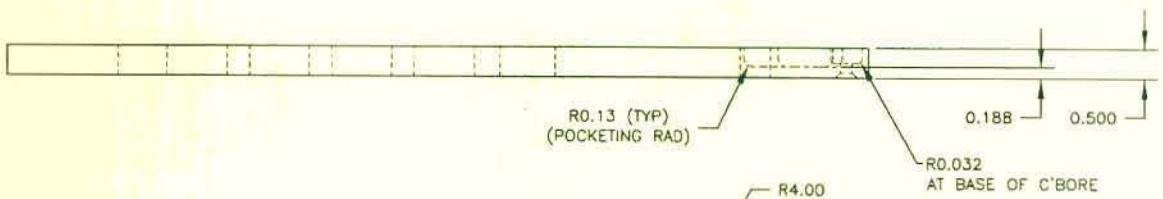

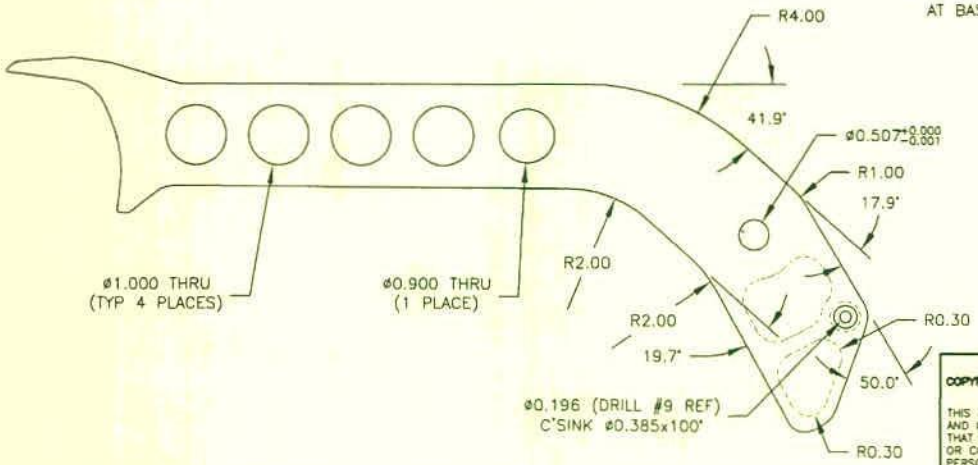

SECTION C-C

VIEW ROTATED
SCALE 1:1

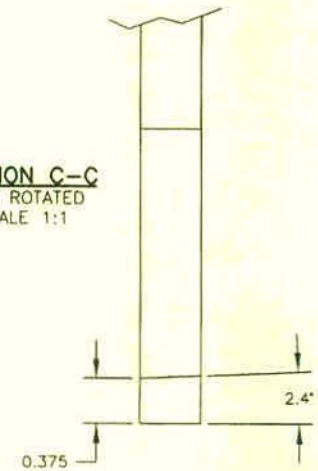

RELEASED 07.06.29

DESIGN	DRAWN BY	DART	DART AEROSPACE LTD. HAWKESBURY, ONTARIO, CANADA
CHECKED	APPROVED	DRAWING NO. D3560	REV. C SHEET 3 OF 3
DATE 07.06.19		TITLE ARM WELDMENT	SCALE 1:2

DART AEROSPACE LTD	Work Order:	35245
Description: Arm	Part Number:	D3560-4
Inspection Dwg: D3560 Rev: B		Page 1 of 1

FIRST ARTICLE INSPECTION CHECKLIST

[X] First Article [ ] Prototype

Drawing Dimension	Tolerance	Actual Dimension	Accept	Reject	Method of Inspection	Comments
Ø0.507	+0.000/-0.001	.507				
Ø0.196	+0.005/-0.001	.196				
Ø1.000	+0.010/-0.001	1.000				
Ø0.900	+0.010/-0.001	.899				
0.500	+/-0.010	.504				
0.250	+/-0.010	.259				
0.275	+/-0.010	.276				
0.188	+/-0.010	.187				
2.000	+/-0.010	2.004				
1.750	+/-0.010	1.752				
1.702	+/-0.010	1.704				
Ø0.385 x 100°	+/-0.010 x 0.5°	.384				
0.250 Deep	+/-0.010	.252				

Measured by:	JS
Date:	07/12/07

Audited by:	JML
Date:	07/12/08

Prototype Approval:	N/A
Date:	N/A

Rev	Date	Change	Revised by	Approved
A	07.01.17	New Issue	KJ/JLM	
B	07.06.13	Dimensions updated per Dwg Rev B	KJ/JLM	